MX-63-126

# SCOPE SHIELD
# VEHICULAR RADIO COMMUNICATION SYSTEM
# OPERATOR'S INSTRUCTIONS

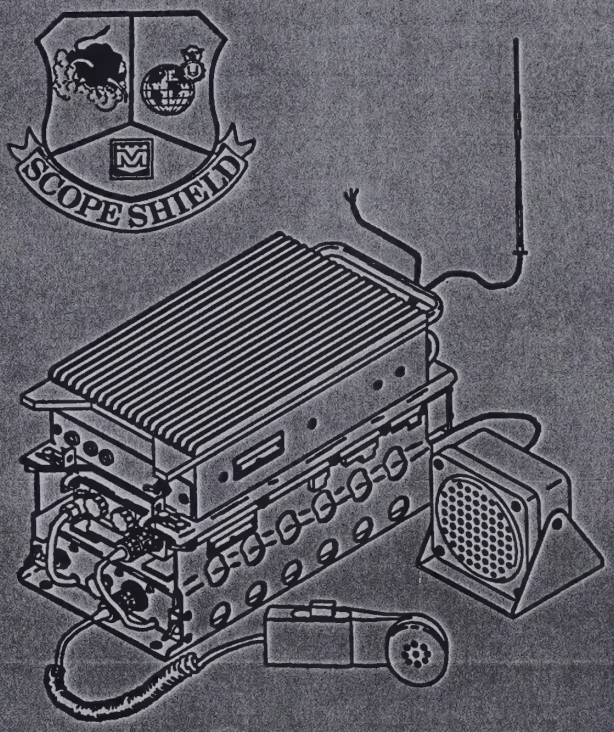


VEHICULAR RADIO COMMUNICATION SYSTEM

1 NOVEMBER 1988

## TABLE OF CONTENTS


| Chapter/Para | | | Page |
|---|---|---|---|
| 1 | | INTRODUCTION | 1 |
| | 1-1 | General Information | 1 |
| | 1-2 | Description of Major Components | 2 |
| 2 | | SETUP FOR USE | 3 |
| | 2-1 | Configuration | 3 |
| | 2-2 | PRC RF/IF Module Change | 4 |
| | 2-3 | Vehicular Antenna Change | 6 |
| | 2-4 | RFPA AMPLIFIER/FILTER Module Change | 9 |
| | 2-5 | Handset/Headset Change | 16 |
| 3 | | OPERATING INSTRUCTIONS | 17 |
| | 3-1 | General | 17 |
| | 3-2 | Description of Connectors, Controls, and Indicators | 17 |
| | 3-3 | Operation | 25 |

# CHAPTER 1

## INTRODUCTION

### 1.1 GENERAL INFORMATION

This manual tells the user how to operate the Scope Shield Vehicular Radio Communication System. Instructions for changing frequency bands are also included.

If the VRC has not been installed and electrical connections completed, refer to installation instructions before using operator's instructions.

## 1.2 DESCRIPTION OF MAJOR COMPONENTS

The following are major components of the Vehicular Radio Communication System.

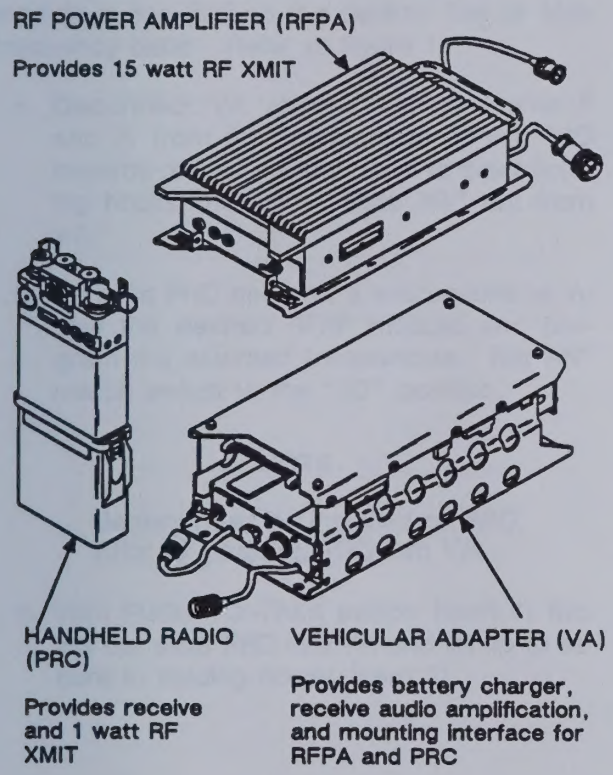




# CHAPTER 2

## SETUP FOR USE

## 2.1 CONFIGURATION

Prior to use the VRC must be configured for the desired frequency band (30–88 MHz) or (130–174 MHz). To configure the VRC perform the following.

a. Refer to para. 2.2 to install the PRC with the RF/IF module that matches the desired frequency band.

b. Refer to para. 2.3 to install the vehicular antenna that matches the desired frequency band.

c. Refer to para. 2.4 to install the RFPA with the Amplifier/Filter module that matches the desired frequency band.

d. Refer to para. 2.5 to install the desired handset/headset.

## 2.2 PRC RF/IF MODULE CHANGE

Perform the following steps to change the RF/IF module in the PRC to the desired low or high frequency band. Refer to figure 1.

a. Disconnect VA chassis cables (items 2 and 3) from PRC connectors. Push PRC towards rear of VA and down to clear holding hooks (item 1). Slide PRC out from VA.

b. Refer to PRC operator's instructions to install the desired RF/IF module and program the selected frequencies. Set ANT match switch to the "50" position.

**NOTE**

Battery must be installed on PRC prior to installing PRC into VA.

c. With PUSH-TO-TALK switch (item 4) facing up, slide PRC into VA and lift up to secure in holding hooks (item 1).



d. Connect VA chassis cables (items 2 and 3) to PRC ANT and AUDIO connectors respectively.

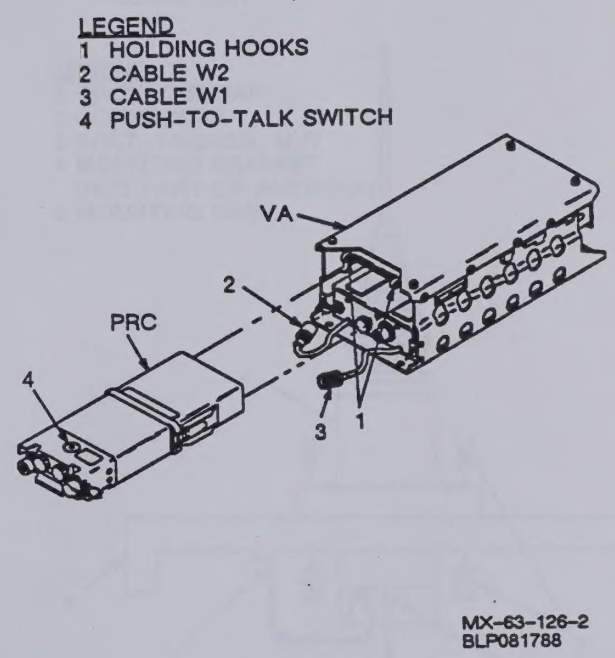


Figure 1. PRC Installation/Removal

## 2.3 VEHICULAR ANTENNA CHANGE

Select the desired low or high band antenna, refer to figure 2 as required, and perform the following steps.

a. Disconnect standard BNC connector (item 2) from antenna base. Disconnect ground strap (item 1) from vehicle mounting bracket (item 4).

b. Remove four 3/8" hex bolts, hex nuts, and washers (item 3). Lift antenna with mounting base (item 5) clear of mounting bracket (item 4).

**NOTE**

Insure rubber gasket is in place between antenna mounting base (item 5) and the mounting bracket (item 4).

c. Install new antenna and align four mounting holes. Install four 3/8" hex bolts, hex nuts, and washers (item 3). Tighten bolts to insure even pressure (250 inch-pounds is recommended).



d. Connect ground strap (item 1) to mounting bracket (item 4). Connect standard BNC connector (item 2) to antenna base connector.

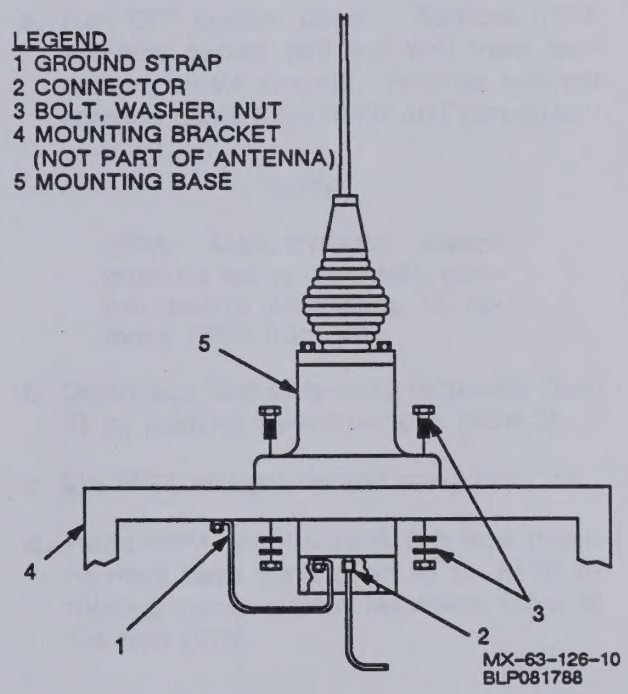


Figure 2. Vehicular Antenna Installation/ Removal

## 2.4 RFPA AMPLIFIER/FILTER MODULE CHANGE

Perform the following steps to change the AMPLIFIER/FILTER module in the RFPA to the desired low or high frequency band. Refer to figure 3.

a. Turn OFF system power. Remove RFPA interface cables (W3 and W4) from connectors on VA chassis. Remove external antenna cable from RFPA ANT connector.

**NOTE**

RFPA AMPL/BYPASS switch must be set to the AMPL position before attempting to remove RFPA from VA.

b. Disengage four slide-snap fasteners (item 1) by pushing inward on tabs (item 2).

c. Lift RFPA straight up and away from VA.

d. Place RFPA with heatsink fins face down. Remove base plate (item 4) on RFPA by rotating seven slotted fasteners (item 5) 1/4 turn CCW.

**NOTE**

Power supply module captive screws are double captivated.

e. Loosen power supply module (item 6) by rotating four spring-loaded captive screws (item 7) CCW until they spring up. Lift spring-loaded captive screws and rotate CCW through second set of captivating threads (AMPLIFIER/ FILTER module standoffs).

**CAUTION**

Handle power supply module carefully as damage to pins may result.

f. Remove power supply module by lifting straight up.

g. Disconnect chassis wiring harness plug P5 (item 8) from connector J5 (item 9). Disconnect plug P2 (item 10) by pulling out from connector J2 (item 11). Disconnect plug P1 (item 12) by pulling out from connector J1 (item 13).

h. Loosen AMPLIFIER/FILTER module (item 14) by rotating six spring-loaded captive screws (item 15) CCW until they spring up.



i. Remove AMPLIFIER/FILTER module (item 14) by lifting filter end first and pulling out at an angle towards the rear of the chassis.

**CAUTION**

Insure thermal pad (item 16) stays flat in bottom of chassis against heat-sink to prevent thermal damage to equipment.

j. Inspect for and remove any foreign material found on thermal pad and mating surfaces of AMPLIFIER/FILTER module to be installed.

k. Install the new AMPLIFIER/FILTER module (item 14) that matches the desired frequency band at an angle by first inserting the AMPLIFIER end and sliding toward the front of the chassis.

l. Align AMPLIFIER/FILTER module with chassis mounting holes (item 17) in heatsink and thread six spring-loaded captive screws (item 15) by rotating CW one to two turns. Do not tighten completely at this time.

m. Install power supply module (item 6) by aligning 4 spring-loaded captive screws

(item 7) with AMPLIFIER mounting holes (item 18) in top of AMPLIFIER/FILTER module. Insure connector pins are aligned and slowly lower until 4 standoff posts (item 19) bottom out and connector pins firmly mate.

**NOTE**

Power supply module captive screws are double captivated.

n. Thread four spring-loaded captive screws (item 7) by rotating CW through AMPLIFIER/FILTER module standoffs. Rotate captive screws CW one to two turns into heatsink. Do not tighten completely at this time.

**CAUTION**

Do not over tighten screws as damage may occur.

o. Alternately tighten (by rotating CW) ten spring-loaded captive screws (items 7 and 15). Tighten screws to insure even pressure on heatsink thermal pad (6-8 inch pounds is recommended).

p. Connect plug P5 (item 8) to connector J5 (item 9). Connect plug P2 (item 10) to



connector J2 (item 11). Connect plug P1 (item 12) to connector J1 (item 13).

q. Install base plate (item 4) and secure by rotating seven slotted fasteners (item 5) 1/4 turn CW.

**NOTE**

RFPA AMPL/BYPASS switch must be set to the AMPL position and all four slide-snap fastners (item 1) on RFPA must be pulled inward before attempting to install RFPA onto VA.

r. Install RFPA onto VA by aligning slide-snap fasteners (item 1) with four mounting posts (item 3) on VA frame cover. Lower RFPA straight down onto VA and engage four slide-snap fasteners (item 1) by pressing outwards on tabs (item 2). Connect RFPA interface cables W3 and W4 to the RFPA and ANT connectors on VA chassis respectively. Connect external antenna cable to RFPA ANT connector.

LEGEND

1 SLIDE-SNAP FASTENERS
2 TAB
3 MOUNTING POSTS
4 BASE PLATE
5 SLOTTED FASTENERS
6 POWER SUPPLY MODULE
7 SPRING-LOADED CAPTIVE SCREWS
8 PLUG P5
9 CONNECTOR J5
10 PLUG P2
11 CONNECTOR J2
12 PLUG P1
13 CONNECTOR J1
14 AMPLIFIER/FILTER MODULE
15 SPRING-LOADED CAPTIVE SCREWS
16 THERMAL PAD
17 CHASSIS MOUNTING HOLES
18 AMPLIFIER MOUNTING HOLES
19 STANDOFF POSTS

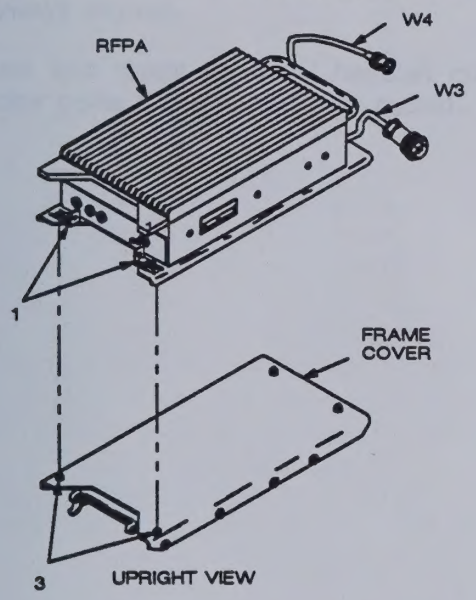


Figure 3. Amplifier/Filter Module Installation/Removal (Sheet 1 of 2)



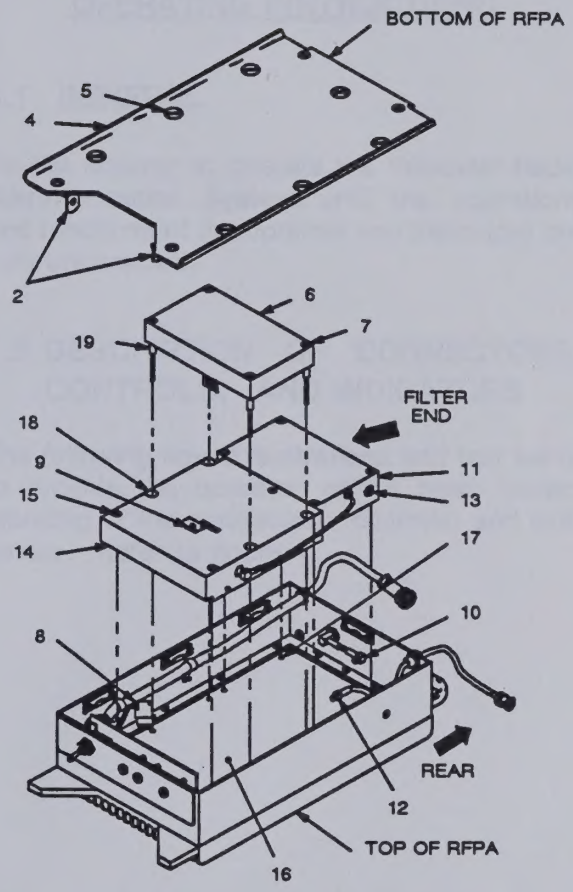


Figure 3. Amplifier/Filter Module Installation/Removal (Sheet 2 of 2)

## 2.5 HANDSET/HEADSET CHANGE

To install the palm mic, ancillary handset, or ancillary ear/mic, perform the following steps.

a. Press and rotate installed handset/headset connector collar CCW. Separate connectors.

b. Mate desired handset/headset connector and MIC/HDST connector on VA with keyways aligned.

c. Press and rotate handset/ headset connector collar CW until securely mated.



# CHAPTER 3

## OPERATING INSTRUCTIONS

## 3.1 GENERAL

Do not attempt to operate the Vehicular Radio Communication System until the operations and functions of the controls and indicators are fully understood.

## 3.2 DESCRIPTION OF CONNECTORS, CONTROLS, AND INDICATORS

The following keyed illustrations and text serve to provide the operator with a basic understanding of the connectors, controls, and indicators. Refer to figure 4.

## 3.2 DESCRIPTION OF CONNECTORS, CONTROLS, AND INDICATORS

| KEY | CONTROL OR INDICATOR | FUNCTION |
|---|---|---|
| 1 | POWER AMPL FAULT indicator | Indicates XMIT mode RFPA fault (high power output only). |
| 2 | 30-88 MHz FREQUENCY BAND indicator | Indicates RFPA configured with low band module and high power (AMPL) output selected. |
| 3 | 130-174 MHz FREQUENCY BAND indicator | Indicates RFPA configured with high band module and high power (AMPL) output selected. |
| 4 | AMPL/BYPASS switch | Selects high (AMPL) or low (BYPASS) RF power output level from RFPA. |
| 5 | VOL/OFF | Turns PRC operating power ON or OFF. Adjusts receive audio level in handset/ headset speaker. |



## 3.2 DESCRIPTION OF CONNECTORS, CONTROLS, AND INDICATORS (CONT)

| KEY | CONTROL OR INDICATOR | FUNCTION |
|---|---|---|
| 6 | AUDIO connector | Provides connection for AF/DC Interface cable between PRC and VA (Cable W1). |
| 7 | AF/DC Interface Cable (W1) | Provides audio/power interface between VA and PRC. |
| 8 | CHGR indicator | Indicates charging rate for NICAD battery on PRC (DIM=battery near full charge, BRIGHT=battery charging, OFF=battery not charging. |
| 9 | MIC/HDST connector | Provides for connection of audio accessories to VA. |
| 10 | XMIT indicator | Indicates transmit mode for VRC, ON= transmitting, OFF= not transmitting. |

## 3.2 DESCRIPTION OF CONNECTORS, CONTROLS, AND INDICATORS (CONT)

| KEY | CONTROL OR INDICATOR | FUNCTION |
|---|---|---|
| 11 | SPKR/VOL control | Adjusts receive audio level in remote speaker. |
| 12 | POWER ON/OFF switch | Controls DC input power to VRC with 15 amp circuit breaker protection. |
| 13 | POWER ON indicator | Indicates DC power is applied to VRC. |
| 14 | RF Interface Cable (W2) | Provides RF interface between PRC and VA. |
| 15 | ANT connector | Provides connection for RF interface cable (W2) between PRC and VA. |
| 16 | CHAN switch | Selects one of ten preset operating channels. |
| 17 | ANT connector | Provides connection for external antenna to RFPA. |
| 18 | RF Interface Cable (W4) | Provides RF interface between RFPA and VA. |



## 3.2 DESCRIPTION OF CONNECTORS, CONTROLS, AND INDICATORS (CONT)

| KEY | CONTROL OR INDICATOR | FUNCTION |
|---|---|---|
| 19 | ANT connector | Provides connection for RF interface cable (W4) between VA and RFPA or external antenna cable when not using RFPA. |
| 20 | PWR connector | Provides connection for DC power cable assembly from vehicle power source to VA. |
| 21 | SPKR connector | Provides connection for remote speaker cable from remote speaker to VA. |
| 22 | CHGR connector | Provides connection for battery charger cable (W5) beween battery charger and VA. |
| 23 | RFPA connector | Provides connection for DC interface cable (W3) between VA and RFPA. |

## 3.2 DESCRIPTION OF CONNECTORS, CONTROLS, AND INDICATORS (CONT)

| KEY | CONTROL OR INDICATOR | FUNCTION |
|---|---|---|
| 24 | Battery Charger Cable (W5) | Provides DC interface between battery charger and VA. |
| 25 | DC Interface Cable (W3) | Provides interface for DC power and control signals between RFPA and VA. |



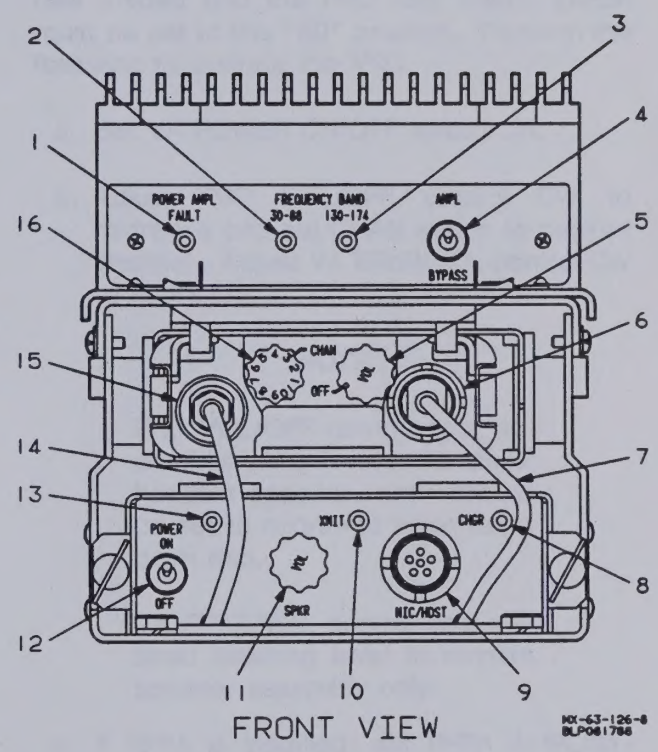


Figure 4. Controls, Indicators, and Connectors (Sheet 1 of 2)

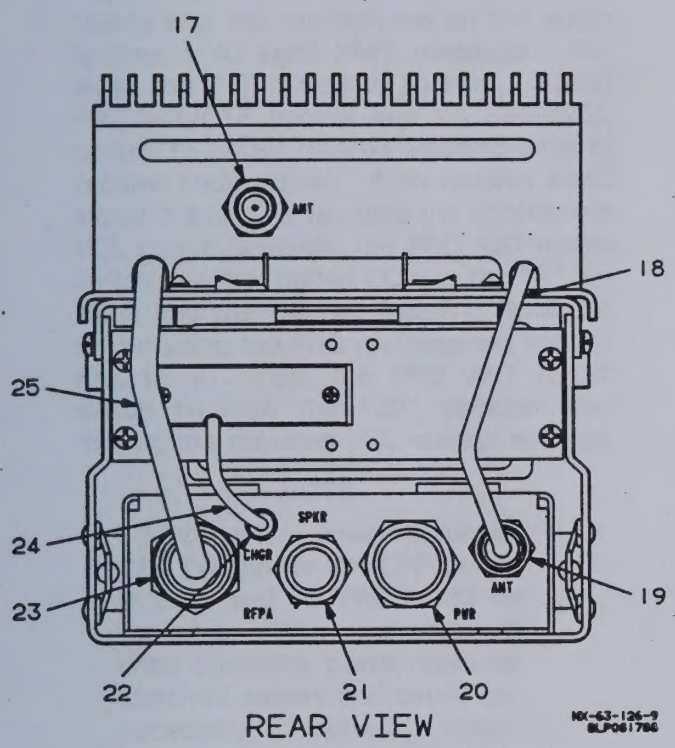


Figure 4. Controls, Indicators, and Connectors (Sheet 2 of 2)



## 3.3 OPERATION

For the VRC system to operate properly the PRC installed must have desired preset channels loaded and the PRC ANT match switch must be set to the "50" position. Perform the following to operate the VRC.

a. Set VA POWER ON/OFF switch ON.

b. Adjust PRC VOL/OFF control CW to midrange and set CHAN switch to desired channel. Adjust VA SPKR/VOL control CW to midrange.

**NOTE**

PRC VOL/OFF control sets desired listening level in handset/headset speaker, and should be set to midrange when using palm mic.

VA SPKR/VOL control sets desired listening level in remote speaker assembly only.

c. If RFPA is installed, set RFPA AMPL/BYPASS switch to desired position for high or low RF output level.

d. To transmit press the push-to-talk (PTT) button on the audio accessory attached to the VA MIC/HDST connector to key the PRC and the RFPA simultaneously. Speak clearly into the microphone on the audio accessory to send XMIT message. Release the PTT button to receive. Adjust PRC VOL/OFF control and VA SPKR/VOL control to obtain desired listening level of receive audio signal. If no receive audio signal is available to make the appropriate VOL control settings, the PRC ANT match switch may be rotated CCW to the "E" position and the desired listening level can be set using the PRC ANT warning tone (1 KHz beep). Set the PRC ANT match switch back to the "50" position after making the required VOL control settings.

**NOTE**

If VRC system power is turned OFF (VA power ON/OFF switch to OFF) and the PRC is still installed in VRC; the PRC will draw operating power from its attached battery and cause unnecessary battery drain. Therefore, if the VRC system is to be left OFF for an extended period of time, it is recommended that the PRC VOL/OFF control be set to OFF (full CCW) to avoid excessive current drain on PRC's battery.



**NOTE**

If the POWER AMPL FAULT indicator is lit during XMIT mode of operation, limited range communication may still be achieved depending on fault conditions. Antenna (VSWR) and thermal (TEMP) related faults will allow the RFPA to transmit at reduced power output levels. Frequency (PLL) related faults will not. The VRC system should only be operated in emergency situations with the POWER AMPL FAULT indicator on.

9-CPD-0024-G

MX-63-127

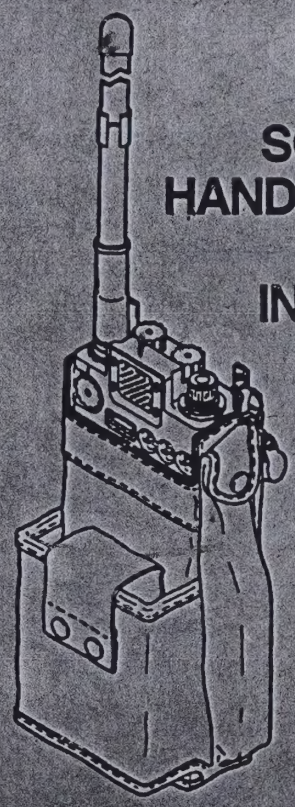

# SCOPE SHIELD HAND HELD RADIO OPERATOR'S INSTRUCTIONS

SCOPE SHIELD

RADIO SET AN/PRC-128

15 JULY 1988

# CHAPTER 1

## INTRODUCTION

### 1.1 GENERAL INFORMATION

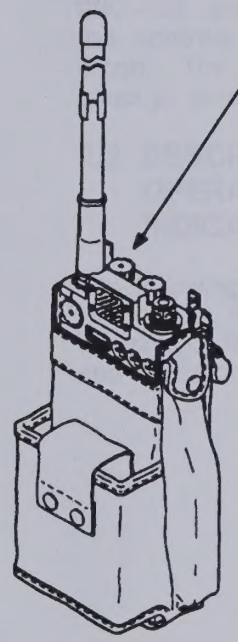


This manual tells the user how to operate the Radio Set AN/PRC-128 and change frequency bands by removal and replacement of the RF/IF module.

## 1.2 LOCATION AND DESCRIPTION OF MAJOR COMPONENTS

The following major components make up Radio Set AN/PRC-128.

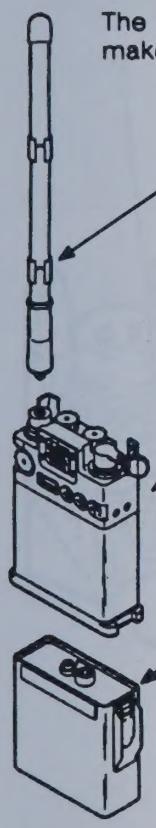

**ANTENNA (LONG)**

(For long range operation in the 30-88 MHz range)

or

**ANTENNA (SHORT)**

(For 130-174 MHz band and short range operation in the 30-88 MHz band)

**RT UNIT**

(Contains all necessary controls for operation)

**NICAD BATTERY ASSEMBLY**

(Houses the battery which supplies power for hand held operation.)



# CHAPTER 2

## OPERATING INSTRUCTIONS

## 2.1 GENERAL

Do not attempt to operate Radio Set AN/PRC-128 until the operations and functions of the controls and indicators are fully understood. The normal operating procedures are given in para. 2.3.1 of this chapter.

## 2.2 DESCRIPTION AND USE OF OPERATOR'S CONTROLS AND INDICATORS

The following keyed illustrations and text serve to provide the operator with a basic understanding of the AN/PRC-128 Radio Set controls and indicators.

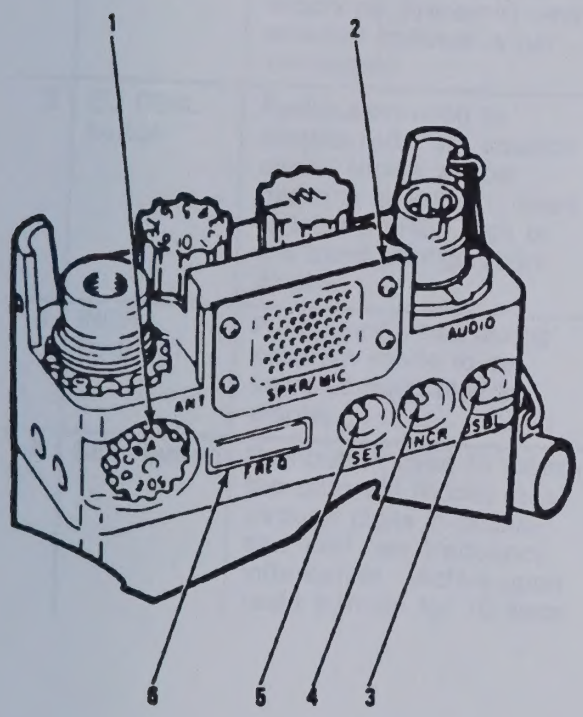




## 2.2 CONTROLS AND INDICATORS

| Key | Control or Indicator | Function |
|---|---|---|
| 1 | ANT match switch | Selects proper antenna matching network for the operating transmit frequency selected or bypasses antenna matching networks to provide a direct 50Ω output. Warning tone sounds in speaker if match is incorrect. Corresponding frequencies for each switch position are as follows:<br>A = 30–36 MHz<br>B = 36–46 MHz<br>C = 46–54 MHz<br>D = 54–64 MHz<br>E = 64–88 MHz<br>50 =130–174 MHz and 50Ω output* |

* The 50Ω output is used only when it is desired to connect a 50Ω antenna system. This optional antenna must provide a DC path of 2000Ω or less between the antenna terminal and ground when transmitting or receiving. When operating in the hi-band mode antenna match switch should always be in 50Ω position.

## 2.2 CONTROLS AND INDICATORS - CONT

| Key | Control or Indicator | Function |
|---|---|---|
| 2 | SPKR/MIC | Functions as built-in speaker (receive) and microphone (transmit) when external handset is not connected. |
| 3 | SQ DSBL button | Pushbutton used to disable radio set squelch circuit (noise will be heard in speaker). Used to initiate FREQ high or low band configuration display. |
| 4 | INCR button | Pushbutton used during program mode to set value of each digit in display. |
| 5 | SET button | Pushbutton used to initiate the program mode, step through digits in display and load new frequency information. Active upon radio turn-on for 10 secs. |



## 2.2 CONTROLS AND INDICATORS - CONT

| Key | Control or Indicator | Function |
|---|---|---|
| 6 | FREQ display | Five-digit Liquid Crystal Display (LCD) used to indicate the selected preset channel frequency. Also displays:<br>- "LOAD" in program mode indicating data previously displayed is now in selected preset channel memory location.<br>- "FILL" during frequency transfer, indicating radio set is ready to send or accept program data.<br>- "HI" or "LO" when SQ DSBL is pressed indicating high or low band configuration.<br>- "Blinking display" when invalid frequency (between 174 and 188 MHz) is programmed in hi-band mode of operation. |

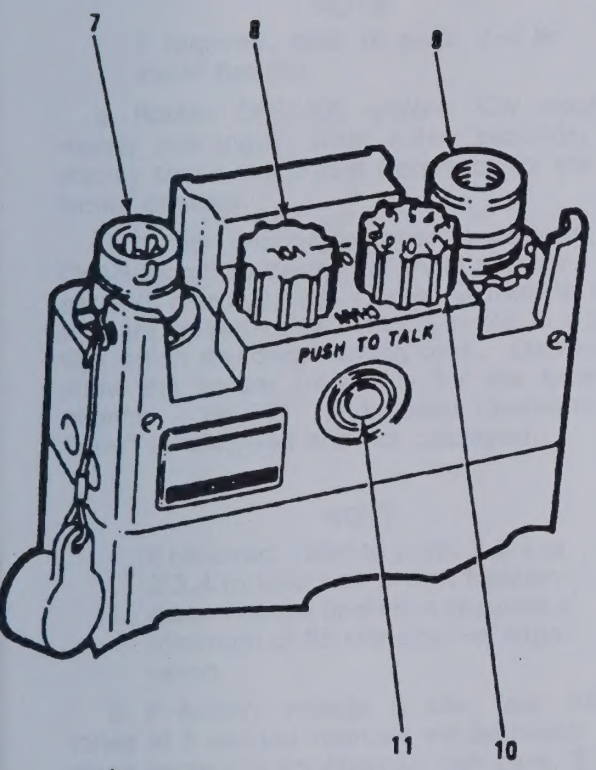




## 2.2 CONTROLS AND INDICATORS - CONT

| Key | Control or Indicator | Function |
|---|---|---|
| 7 | AUDIO connector | Standard connector for use with external handset H-250/U. Provides connection for external fill device. |
| 8 | OFF/VOL control | Turns radio set ON (CW) or OFF (full CCW). Adjusts level of sound heard from radio set or handset speaker. |
| 9 | ANT Connector | Connects antenna to radio set. |
| 10 | CHAN selector switch | Selects one of 10 preset operating channels. In programming mode, selects channel to be loaded. |
| 11 | PUSH TO TALK (PTT) button | Enables radio set to transmit when pressed. |

## 2.3 OPERATION UNDER NORMAL CONDITIONS

### 2.3.1 NORMAL OPERATION

**NOTE**

If required, refer to para. 2-4 to install battery.

a. Rotate OFF/VOL control CW approximately midrange. After a few seconds, the display shows the preset frequency for the selected channel.

b. If new channel number is desired, set CHAN switch to desired channel number. Reset ANT match switch if antenna warning tone is heard by setting ANT match switch to a position which disables warning tone. Display will show the preset frequency for the selected channel. (NOTE: In hi-band operation the "one" is assumed and not displayed.)

**NOTE**

If required, refer to para. 2.3.2 or 2.3.4 to load new preset frequencies. Normal operation requires a minimum of 25 kHz channel separation.

c. If battery voltage is low, four 400 Hz tones at 6 second intervals will be heard. Replace battery in accordance with para. 2.4.



d. **Press and hold** the SQ DSBL pushbutton. Adjust the OFF/VOL control for desired listening level. Release SQ DSBL pushbutton to disable speaker noise.

e. The radio set is now ready to operate.

f. Press PUSH TO TALK (PTT) button to transmit, release to receive.

### 2.3.2 CHANNEL PROGRAMMING

a. Set CHAN switch to the channel number to be programmed.

b. Turn OFF/VOL control CCW to OFF position and then CW to on. Press SET button within 10 seconds.

**NOTE**

If more than 10 secs lapse between loading of one channel and beginning the programming of the next channel, the radio set needs to be turned off and back on to reactivate the programming mode.

c. Radio set is now in program mode. The display indicates the left-most digit of the old frequency. (Next to left-most digit when in hi-band mode.)

d. Press INCR button until the display indicates the desired digit of the new frequency.

e. Press SET button momentarily. The next digit to the right is displayed.

f. Repeat steps d and e until all digits are set for the new frequency.

**NOTE**

In some operating configurations up to seven digits are required. When operating in hi-band mode, the hundreds MHz digit is not displayed. When the operating frequency contains four significant digits right of the decimal point, the third digit is rounded to the nearest even digit. Example:

| Frequency | FREQ display |
|---|---|
| 136.000 | 36.000 |
| 52.0125 | 52.012 |
| XX.025 | XX.025 |
| XX.0375 | XX.038 |
| XX.050 | XX.050 |
| XX.0625 | XX.062 |
| XX.075 | XX.075 |
| XX.0875 | XX.088g. |



g. Press SET button. "LOAD" is displayed momentarily. Channel is now loaded with the new frequency.

h. Repeat steps a. through g. to reprogram other channels.

## 2.3.3 CHANNEL PROGRAMMING USING A FREQUENCY TRANSFER CABLE

a. Refer to para. 2.3.2 as required and load the desired frequencies into the designated master radio set.

b. Turn master radio and radio to be programmed OFF.

c. Remove handsets (if used) from both radio set AUDIO connectors and connect frequency transfer cable between the two AUDIO connectors.

d. Turn both radio sets back on. Both radio displays will indicate "FILL".

e. Momentarily press the master radio set PUSH TO TALK button to start the data transfer.

f. Frequency transfer is complete when the LCD of both radios display "donE".

g. Turn both radio sets OFF.

h. Remove frequency transfer cable and install handsets (if used).

i. Turn both radio sets on and check channel 6 to verify frequency transfer.

### 2.3.4 TRANSMIT OFFSET FREQUENCY PROGRAMMING FOR HALF-DUPLEX OPERATION

a. After performing steps a. through g. of para. 2.3.2 for the desired receive frequency, perform steps a. through f. of para. 2.3.2 for the desired transmit frequency.

b. Press the PTT button and **while holding it down**, press the SET button momentarily. "LOAD" is displayed. Release PTT button. The transmit frequency for the selected channel is now loaded. The receive frequency will remain as was set in 2.3.2 above.

**NOTE**

The radio set normally displays the receive frequency used during half-duplex operation. To display the transmit offset frequency, press the PTT button.

c. Repeat steps a. and b. as necessary to program other offset frequencies.



## 2.4 BATTERY INSTALLATION/ REMOVAL

To install/remove a battery in the radio set, perform the following steps:

a. Unfasten latches on battery housing; remove battery assembly. (Handle case carefully as damaged case will not seal properly.) If using ancillary disposable battery, remove battery housing first and then battery.

**CAUTION**

Ensure the Secure Voice Module (SVM) shorting plug is installed or radio will not operate.

b. Plug new battery assembly into mating connector on RT unit and secure with the two latches.

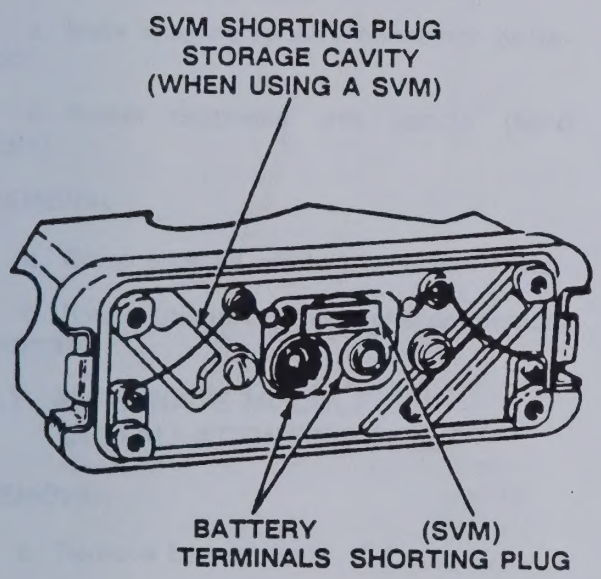


RT UNIT
BOTTOM VIEW



## 2.5 HANDSET INSTALLATION/ REMOVAL

### INSTALLATION

a. Remove radio audio connector dust cover.

b. Mate handset connector and AUDIO connector with keyways aligned.

c. Press down and rotate handset connector collar clockwise until connectors are securely mated (hand tight).

### REMOVAL

a. Press and rotate handset connector collar counterclockwise

b. Separate connectors.

c. Install dust cover on radio audio connector.

## 2.6 ANTENNA (LONG OR SHORT) INSTALLATION/REMOVAL

### INSTALLATION

a. Mate antenna to ANT connector on radio.

b. Rotate clockwise until secure (hand tight).

### REMOVAL

a. Grasp antenna where connectors mate.

b. Rotate counterclockwise until connectors separate.

## 2.7 ALTERNATE MODULE INSTALLATION/REMOVAL

### REMOVAL

a. Remove battery (para. 2.4 step a.).

b. Remove module cover by turning the two captive screws counterclockwise (located on bottom of module cover) and pulling cover from RT unit.



c. Hold RT in palm of one hand and grip the RF/IF module with the thumb and forefinger of the other hand. Fingerholds are provided on the module through open areas in the radio set frame. Gently rock the module and pull straight out from the frame.

### INSTALLATION

a. Align the frame connector(s) pins with the module mating sockets of the RF/IF to be installed.

b. Gently push the module straight into the frame until the module housing is seated on the frame divider plate.

c. Slide module cover over RT unit and secure with the two captive screws located on the bottom of the cover (turn clockwise).

d. Plug battery into mating connector on bottom of RT unit.

e. Secure with the two latches.

f. Install appropriate antenna.

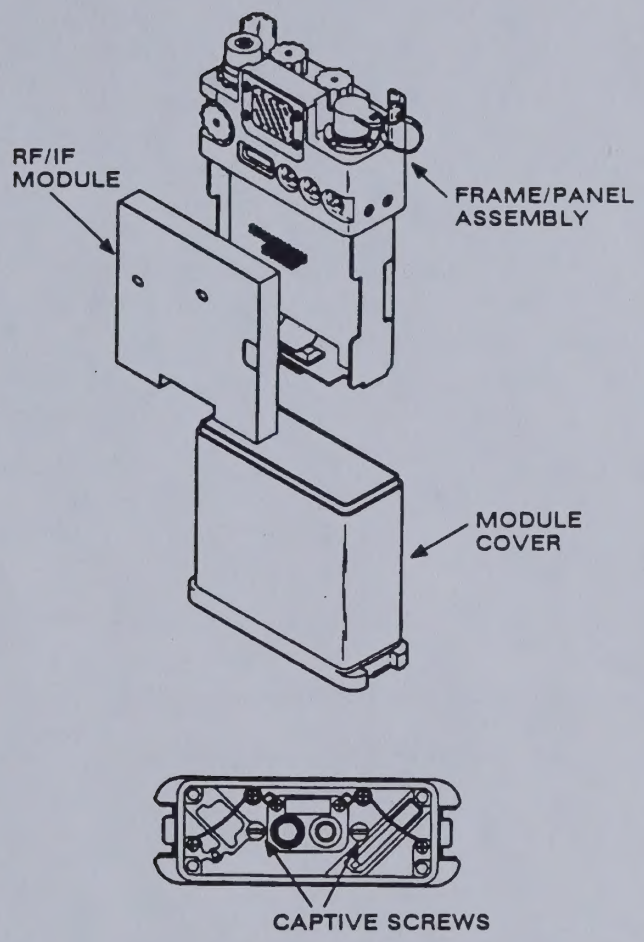
RF/IF
MODULE
FRAME/PANEL
ASSEMBLY
MODULE
COVER
CAPTIVE SCREWS